KiK|MPi
Kennis- en innovatiecentrum Maintenance Procesindustrie

Interreg
EUROPESE UNIE
Vlaanderen-Nederland
Europees Fonds voor Regionale Ontwikkeling

Het reduceren van emissies

Online event
Circulair Onderhoud
29 september 2020

Peter Dijkgraaf
Dijkgraaf-Support

Reduction of flange diffuse emissions

a contributor to meet the

Paris agreement on climate change

Effect of flange tightening methods
on bolt load scatter

FLANGE DIFFUSE EMISSION

Key variables

Flange/Piping Design	Material Qualities	Flange Procedure	**Tightening Method**	Execution Quality	QA/QC Process	Operational Conditions

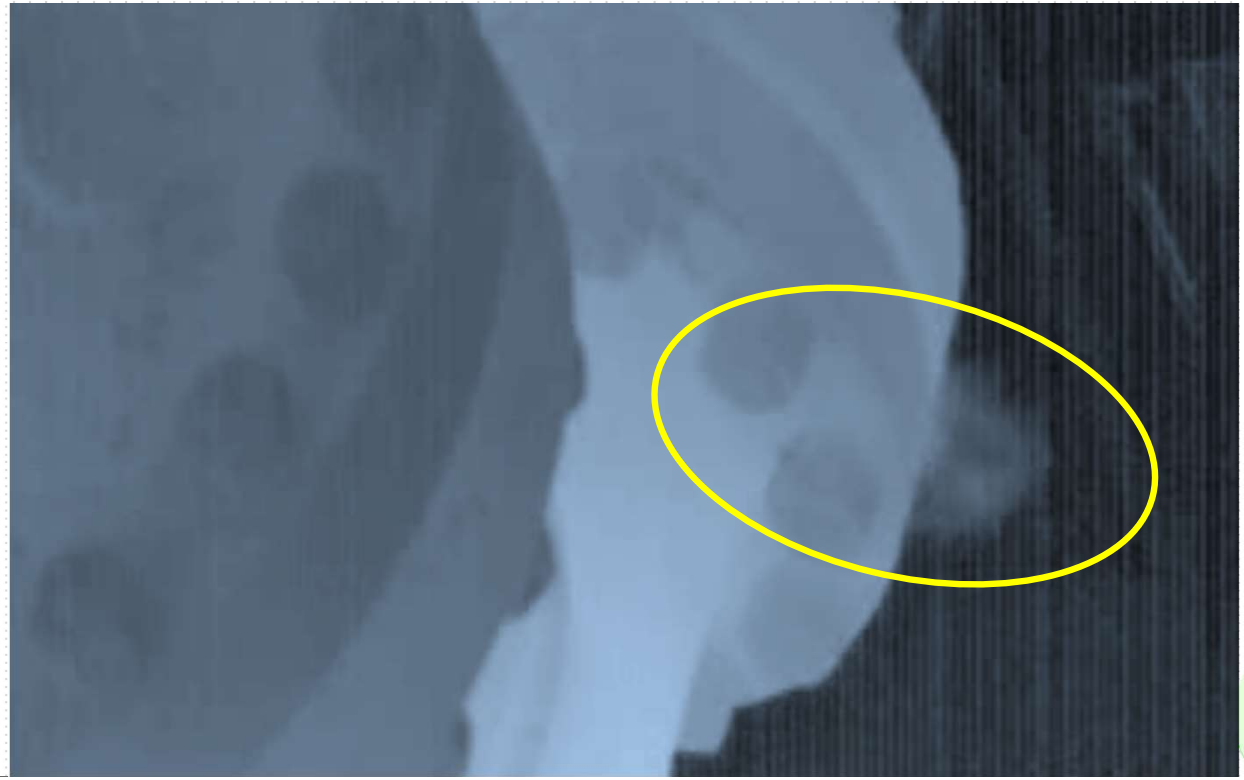

FLANGE DIFFUSE EMISSION

Gasket pressure profile

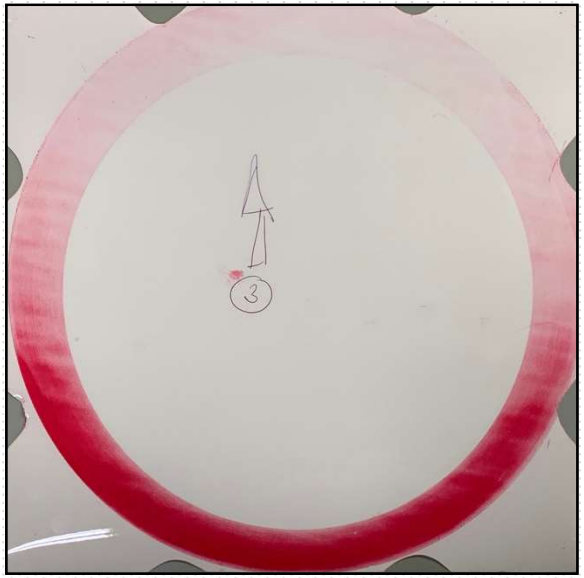

Flange/Piping Design	Material Qualities	Flange Procedure	**Tightening Method**	Execution Quality	QA/QC Process	Operational Conditions

Flange diffuse emission rate

Bolt load – Gasket load

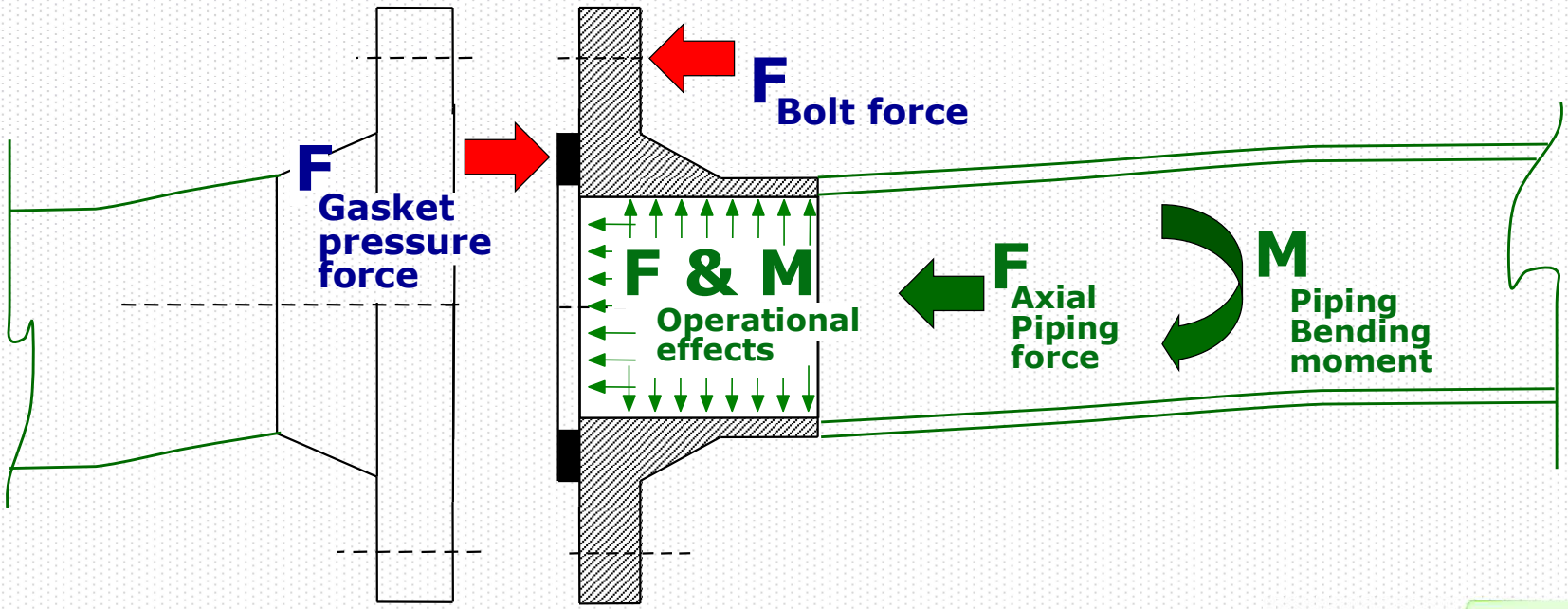

Flange/Piping Design	Material Qualities	Flange Procedure	**Tightening Method**	Execution Quality	QA/QC Process	Operational Conditions

PROJECT EXECUTION

Full scale bolt load testing – testing scheme

	Hand Torque	Electric Torquing	Hydraulic Torque With Reaction arm	Hydraulic Torque Without Reaction arm	Hydraulic Tensioning
			Standard patron	Standard patron	
Tightening Method	**(A)**	**(B)**	**(C)**	**(D)**	**(E)**

Flange	Bolts	Tightening Methods to be tested on flange / bolt size				
4"	8 x D = 7/8"	(A)	(B)	(C)	(D)	(E)
6"	12 x D = 1"		(B)	(C)	(D)	(E)
10"	16 x D = 1 1/4"			(C)	(D)	(E)
16"	20 x D = 1 1/2"			(C)	(D)	(E)

Flange/Piping Design | Material Qualities | Flange Procedure | **Tightening Method** | Execution Quality | QA/QC Process | Operational Conditions

PROJECT EXECUTION

Full scale bolt load testing - load cells

Alarming

This graph shows the measured results. Alarming too low or too high can be adjusted with a network interface.

It is possible to set an alarm with a PDI-NT box and the RS-232 and Analog converter.

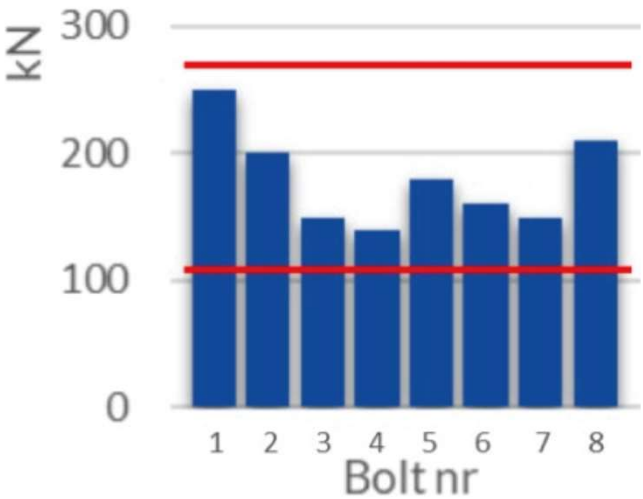

Flange/Piping Design	Material Qualities	Flange Procedure	**Tightening Method**	Execution Quality	QA/QC Process	Operational Conditions

PROJECT EXECUTION

Full scale bolt load testing – Flange dimensions

Flange Dimension	Flange Rating	Number of bolts Bolt diameter	Flange weight [kg]
4"	600#	8 x D = 7/8"	2 x 17,4
6"	600#	12 x D = 1"	2 x 34,9
10"	600#	16 x D = 1 1/4"	2 x 86,5
16"	600#	20 x D = 1 1/2"	2 x 170,0

Flange/Piping Design | Material Qualities | Flange Procedure | **Tightening Method** | Execution Quality | QA/QC Process | Operational Conditions

PROJECT EXECUTION

Full scale bolt load testing – testing skid

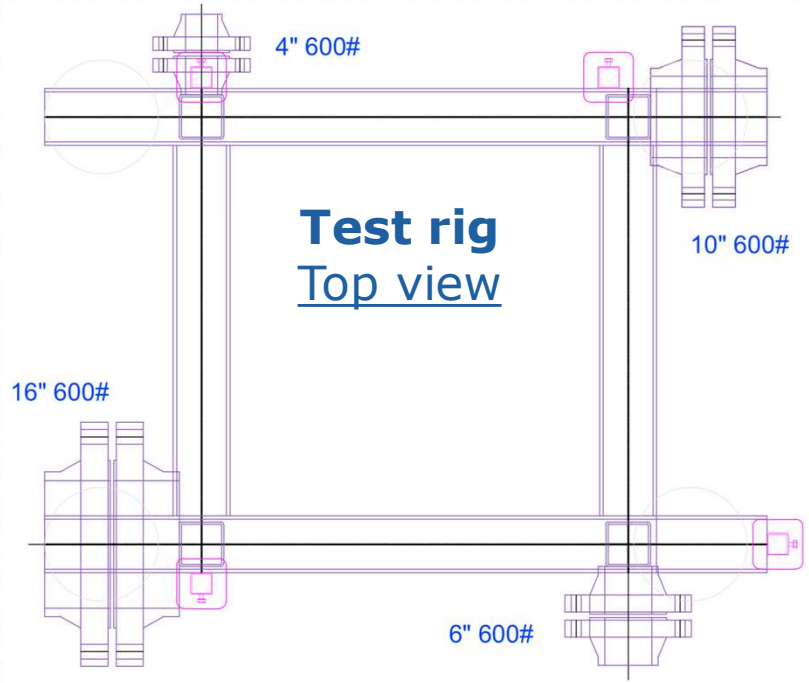

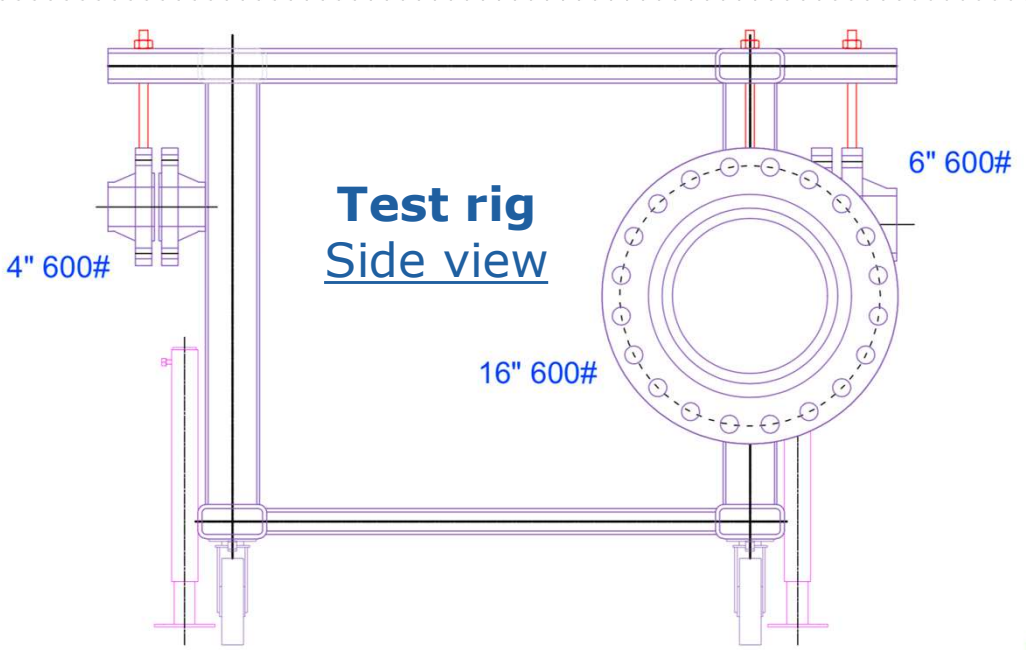

Flange/Piping Design	Material Qualities	Flange Procedure	**Tightening Method**	Execution Quality	QA/QC Process	Operational Conditions